© 2021 All rights reserved.
This document may not, in whole or in part, be copied, photocopied, reproduced, translated or converted to any electronic or machine readable from without prior written permission of Mehmet Günce Akkoyun.
Engineer contact : akkoyun@me.com

Property of STF Irrigation

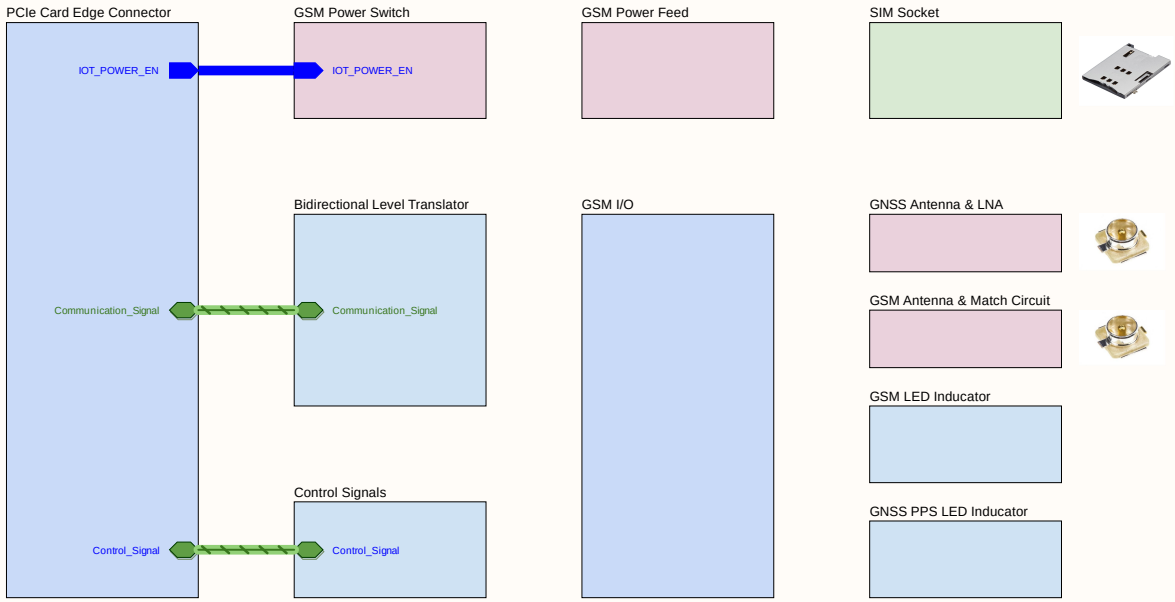

www.github.com/akkoyun/B152AA

GSM IoT Block Diagram		Engineer : Gunce Akkoyun	STF Res-Dev
		Customer : STF Irrigation	Buyuk Kayacik Mah. 4. OSB
Size : A4	Project : --	Product ID : --	103. Cad. No : 12
		Module ID : B101AA	Selcuklu / Konya Türkiye
Date : 4.10.2022	Time : 10:53:41 Page : 1 / 15	Version : R1	
File : GSM IoT Block Diagram.SchDoc		Revision : 00.00.01	

Copyright 2022 STF Tarim (Commercial Secret)

© 2021 All rights reserved.
This document may not, in whole or in part, be copied, photocopied, reproduced, translated or converted to any electronic or machine readable from without prior written permission of Mehmet Günce Akkoyun.
Engineer contact : akkoyun@me.com

Property of STF Irrigation

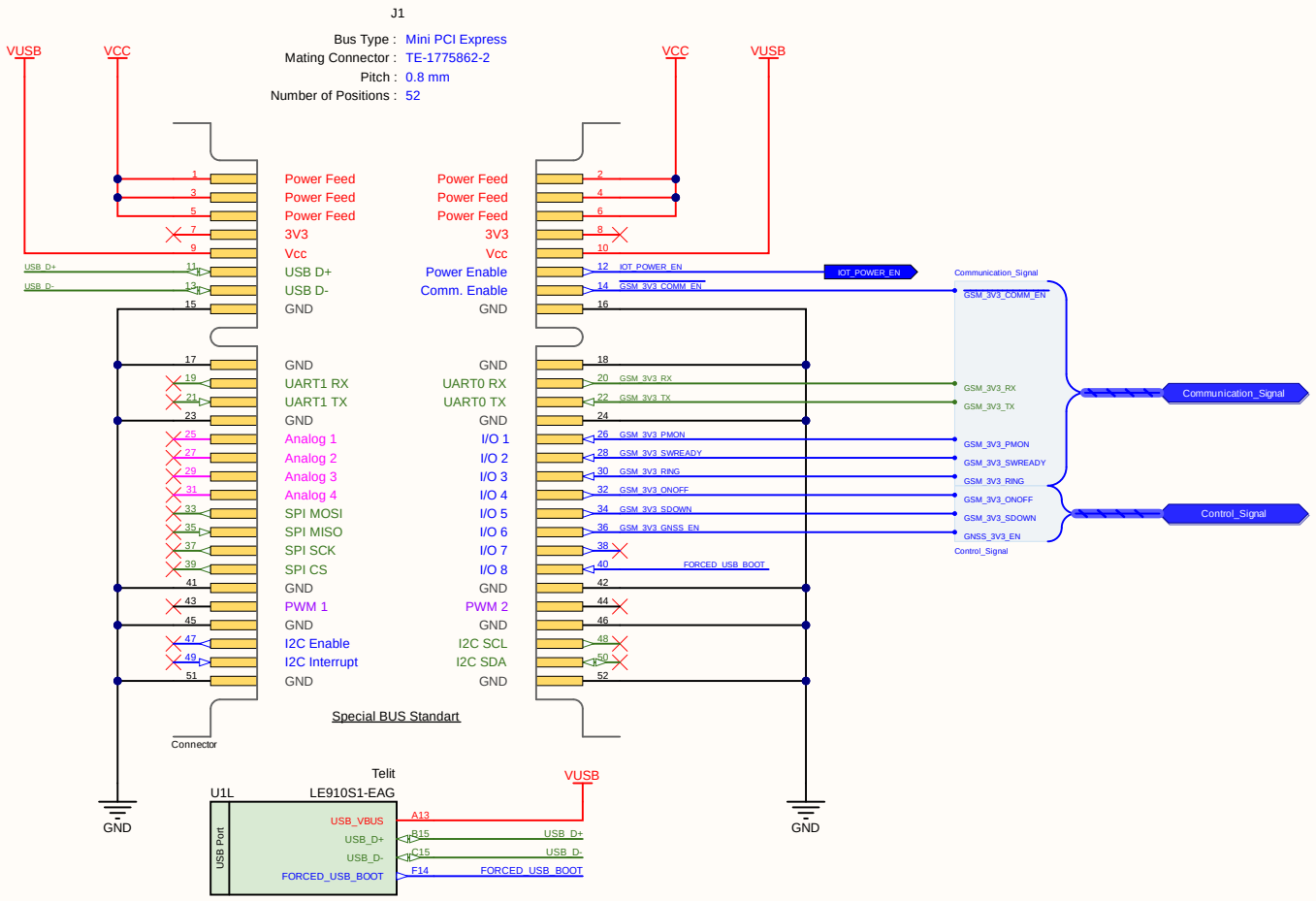

www.github.com/akkoyun/B152AA

Card Edge Connector		Engineer : Gunce Akkoyun	STF Res-Dev
		Customer : STF Irrigation	Buyuk Kayacik Mah. 4. OSB
Size : A4	Project : --	Product ID : --	103. Cad. No : 12
		Module ID : B101AA	Selcuklu / Konya Türkiye
Date : 4.10.2022	Time : 10:53:41	Page : 2 / 15	Version : R1
File : Card Edge Connector.SchDoc		Revision : 00.00.01	

Copyright 2022 STF Tarim (Commercial Secret)

© 2021 All rights reserved.
This document may not, in whole or in part, be copied, photocopied, reproduced, translated or converted to any electronic or machine readable from without prior written permission of Mehmet Günce Akkoyun.
Engineer contact : akkoyun@me.com

Property of STF Irrigation

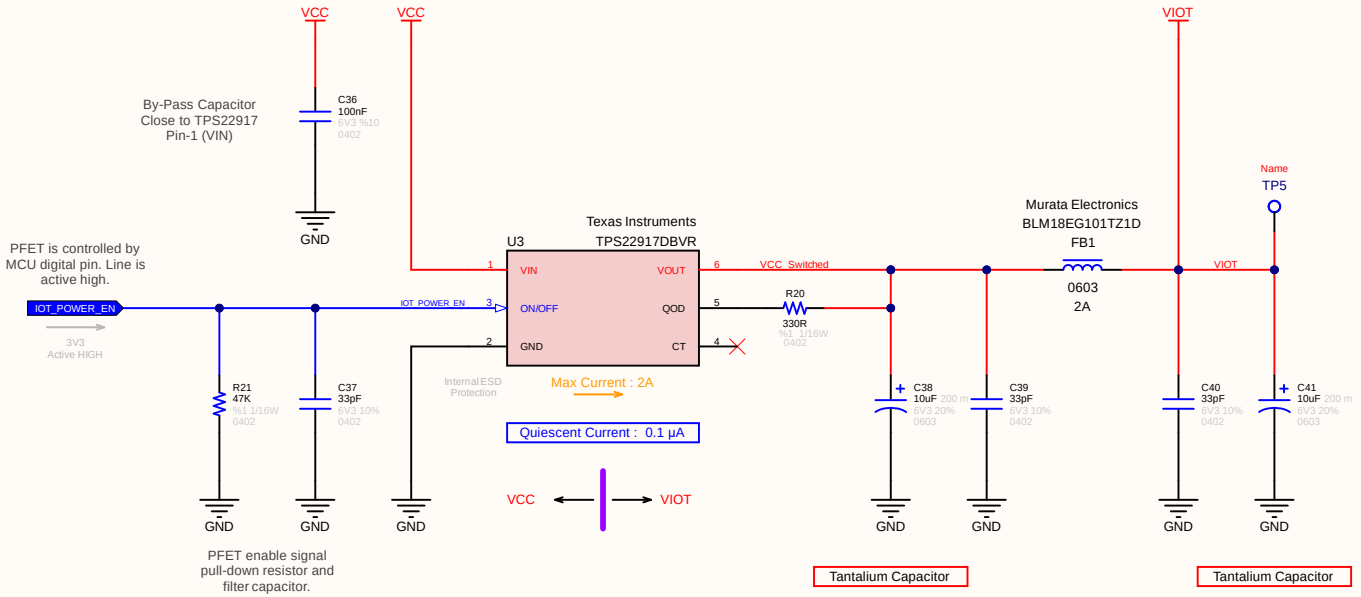

www.github.com/akkoyun/B152AA

GSM Modem Power Feed		Engineer : Gunce Akkoyun	**STF Res-Dev**
		Customer : STF Irrigation	Buyuk Kayacik Mah. 4. OSB
Size : A4	Project : --	Product ID : --	103. Cad. No : 12
		Module ID : B101AA	Selcuklu / Konya Türkiye
Date : 4.10.2022	Time : 10:53:41	Page : 3 / 15	Version : R1
File : GSM Power Switch.SchDoc		Revision : 00.00.01	

Copyright 2022 STF Tarim (Commercial Secret)

© 2021 All rights reserved.
This document may not, in whole or in part, be copied, photocopied, reproduced, translated or converted to any electronic or machine readable from without prior written permission of Mehmet Günce Akkoyun.
Engineer contact : akkoyun@me.com

Property of STF Irrigation

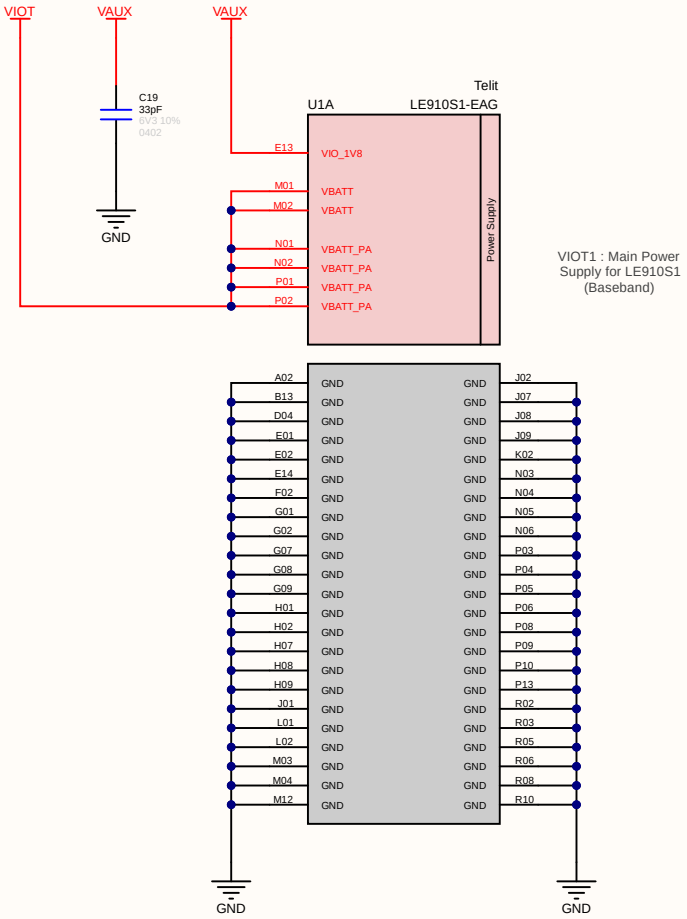

VIOT1 : Main Power Supply for LE910S1 (Baseband)

www.github.com/akkoyun/B152AA

GSM Modem Power Feed		Engineer : Gunce Akkoyun	STF Res-Dev
		Customer : STF Irrigation	Buyuk Kayacik Mah. 4. OSB
Size : A4	Project : --	Product ID : --	103. Cad. No : 12
		Module ID : B101AA	Selcuklu / Konya Türkiye
Date : 4.10.2022	Time : 10:53:41	Page : 4 / 15	Version : R1
File : GSM Modem Power Feed.SchDoc		Revision : 00.00.01	

Copyright 2022 STF Tarim (Commercial Secret)

© 2021 All rights reserved.
This document may not, in whole or in part, be copied, photocopied, reproduced, translated or converted to any electronic or machine readable from without prior written permission of Mehmet Günce Akkoyun.
Engineer contact : akkoyun@me.com

Property of STF Irrigation

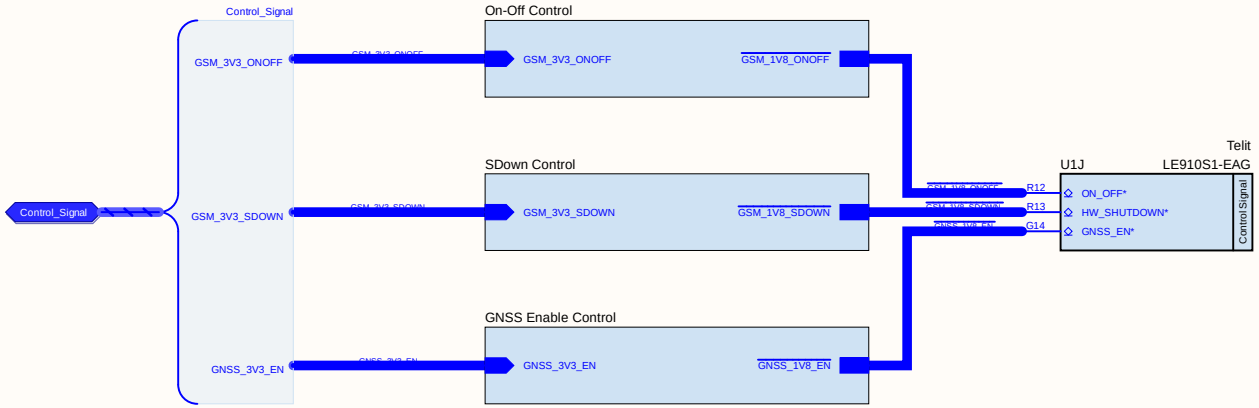

www.github.com/akkoyun/B152AA

Signal Control Block		Engineer : Gunce Akkoyun	STF Res-Dev
		Customer : STF Irrigation	Buyuk Kayacik Mah. 4. OSB
Size : A4	Project : --	Product ID : --	103. Cad. No : 12
		Module ID : B101AA	Selcuklu / Konya Türkiye
Date : 4.10.2022	Time : 10:53:41	Page : 5 / 15	Version : R1
File : Signal Control Block.SchDoc		Revision : 00.00.01	

Copyright 2022 STF Tarim (Commercial Secret)

© 2021 All rights reserved.
This document may not, in whole or in part, be copied, photocopied, reproduced, translated or converted to any electronic or machine readable from without prior written permission of Mehmet Günce Akkoyun.
Engineer contact : akkoyun@me.com

Property of STF Irrigation

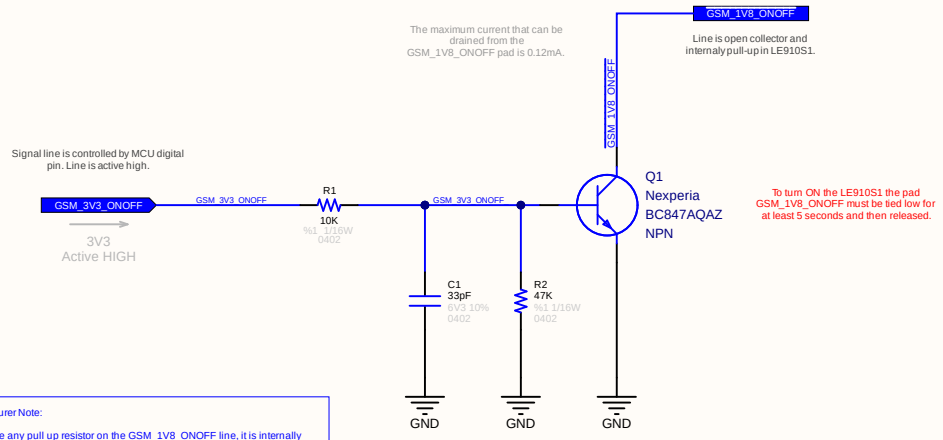

Manufacturer Note:

* Don't use any pull up resistor on the GSM_1V8_ONOFF line, it is internally pulled up. Using pull up resistor may bring to latch up problems on the LE910 power regulator and improper power on/off of the module. The line GSM_1V8_ONOFF must be connected only in open collector configuration.

* To check if the device has powered on, the hardware line PWRMON should be monitored. The device is powered on when PWRMON goes high.

* It is mandatory to avoid sending data to the serial ports during the first 200ms of the module start-up.

www.github.com/akkoyun/B152AA

On / Off Signal Control		Engineer :	Gunce Akkoyun
		Customer :	STF Irrigation
Size : A4	Project : --	Product ID :	--
		Module ID :	B101AA
Date : 4.10.2022	Time : 10:53:41	Page : 6 / 15	Version : R1
File : On-Off Signal Control.SchDoc			Revision : 00.00.01

STF Res-Dev

Buyuk Kayacik Mah. 4. OSB
103. Cad. No : 12
Selcuklu / Konya Türkiye

Copyright 2022 STF Tarim (Commercial Secret)

© 2021 All rights reserved.
This document may not, in whole or in part, be copied, photocopied, reproduced, translated or converted to any electronic or machine readable from without prior written permission of Mehmet Günce Akkoyun.
Engineer contact : akkoyun@me.com

Property of STF Irrigation

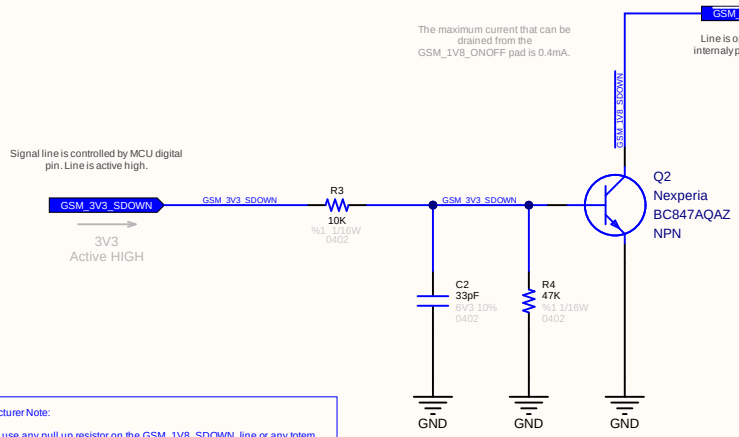

Manufacturer Note:

* Do not use any pull up resistor on the GSM_1V8_SDOWN line or any totem pole digital output. Using pull up resistor may bring to latch up problems on the LE910S1 power regulator and improper functioning of the module. The line GSM_1V8_SDOWN must be connected only in open collector configuration, since it is already internally pull-up to VBATT.

* The unconditional hardware shutdown must always be implemented on the boards and the software must use it as an emergency exit procedure.

* In order to avoid a back powering effect it is recommended to avoid having any HIGH logic level signal applied to the digital pins of the GE910 when the module is powered off or during an ON/OFF transition.

www.github.com/akkoyun/B152AA

Shut Down Signal Control		Engineer :	Gunce Akkoyun
		Customer :	STF Irrigation
Size : A4	Project : --	Product ID :	--
		Module ID :	B101AA
Date : 4.10.2022	Time : 10:53:41	Page : 7 / 15	Version : R1
File : Shut Down Signal Control.SchDoc			Revision : 00.00.01

STF Res-Dev

Buyuk Kayacik Mah. 4. OSB
103. Cad. No : 12
Selcuklu / Konya Türkiye

Copyright 2022 STF Tarim (Commercial Secret)

© 2021 All rights reserved.
This document may not, in whole or in part, be copied, photocopied, reproduced, translated or converted to any electronic or machine readable from without prior written permission of Mehmet Günce Akkoyun.
Engineer contact : akkoyun@me.com

Property of STF Irrigation

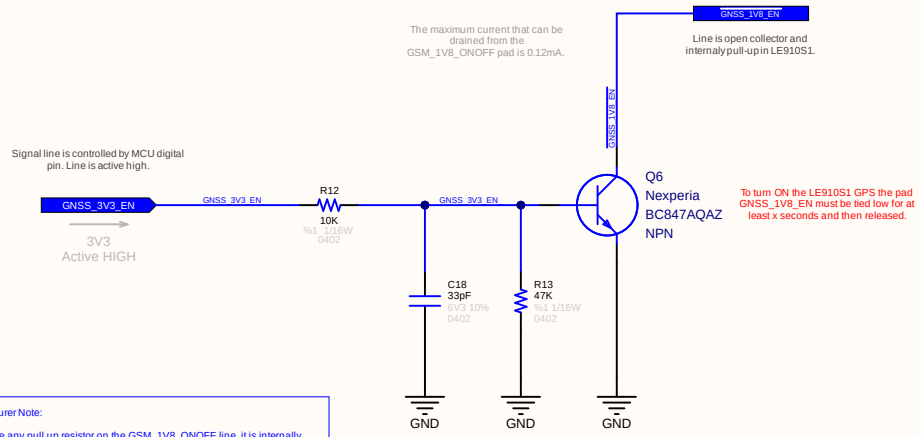

Manufacturer Note:

* Don't use any pull up resistor on the GSM_1V8_ONOFF line, it is internally pulled up. Using pull up resistor may bring to latch up problems on the LE910 power regulator and improper power on/off of the module. The line GSM_1V8_ONOFF must be connected only in open collector configuration.

* To check if the device has powered on, the hardware line PWRMON should be monitored. The device is powered on when PWRMON goes high.

* It is mandatory to avoid sending data to the serial ports during the first 200ms of the module start-up.

www.github.com/akkoyun/B152AA

On / Off Signal Control		Engineer :	Gunce Akkoyun
		Customer :	STF Irrigation
Size : A4	Project : --	Product ID :	--
		Module ID :	B101AA
Date : 4.10.2022	Time : 10:53:42	Page : 8 / 15	Version : R1
File : GNSS EN Signal Control.SchDoc		Revision :	00.00.01

STF Res-Dev

Buyuk Kayacik Mah. 4. OSB
103. Cad. No : 12
Selcuklu / Konya Türkiye

Copyright 2022 STF Tarim (Commercial Secret)

© 2021 All rights reserved.
This document may not, in whole or in part, be copied, photocopied, reproduced, translated or converted to any electronic or machine readable from without prior written permission of Mehmet Günce Akkoyun.
Engineer contact : akkoyun@me.com

Property of STF Irrigation

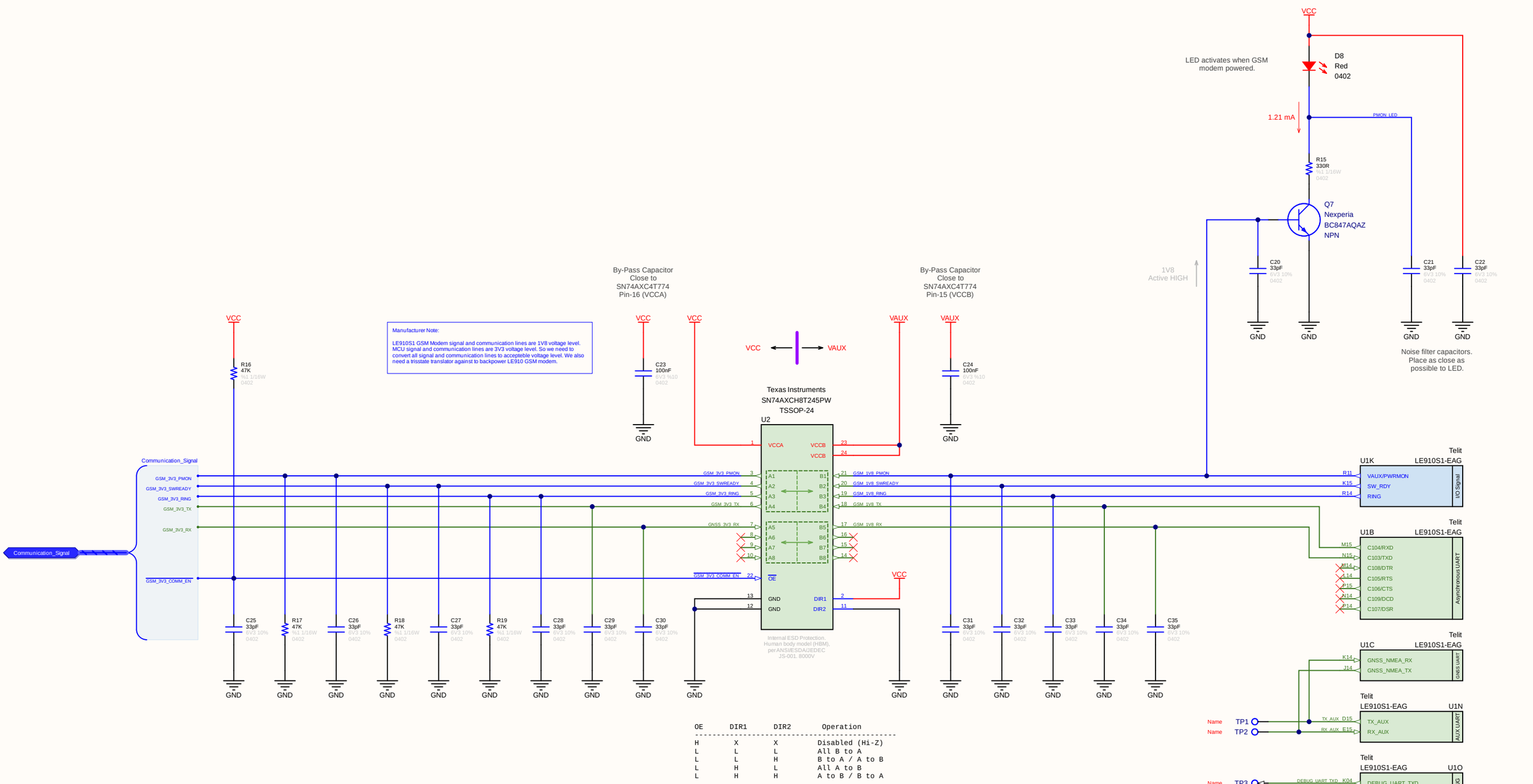

OE	DIR1	DIR2	Operation
H	X	X	Disabled (Hi-Z)
L	L	L	All B to A
L	L	H	B to A / A to B
L	H	L	All A to B
L	H	H	A to B / B to A

www.github.com/akkoyun/B152AA

Voltage Translator		Engineer : Gunce Akkoyun	STF Res-Dev
Size : A4	Project : --	Customer : STF Irrigation	Buyuk Kayacik Mah. 4. OSB
		Product ID : --	103. Cad. No : 12
Date : 4.10.2022	Time : 10:53:42	Module ID : B101AA	Selcuklu / Konya Türkiye
File : Voltage Translator.SchDoc	Page : 9 / 15	Version : R1	
		Revision : 00.00.01	

Copyright 2022 STF Tarim (Commercial Secret)

© 2021 All rights reserved.
This document may not, in whole or in part, be copied, photocopied, reproduced, translated or converted to any electronic or machine readable from without prior written permission of Mehmet Günce Akkoyun.
Engineer contact : akkoyun@me.com

Property of STF Irrigation

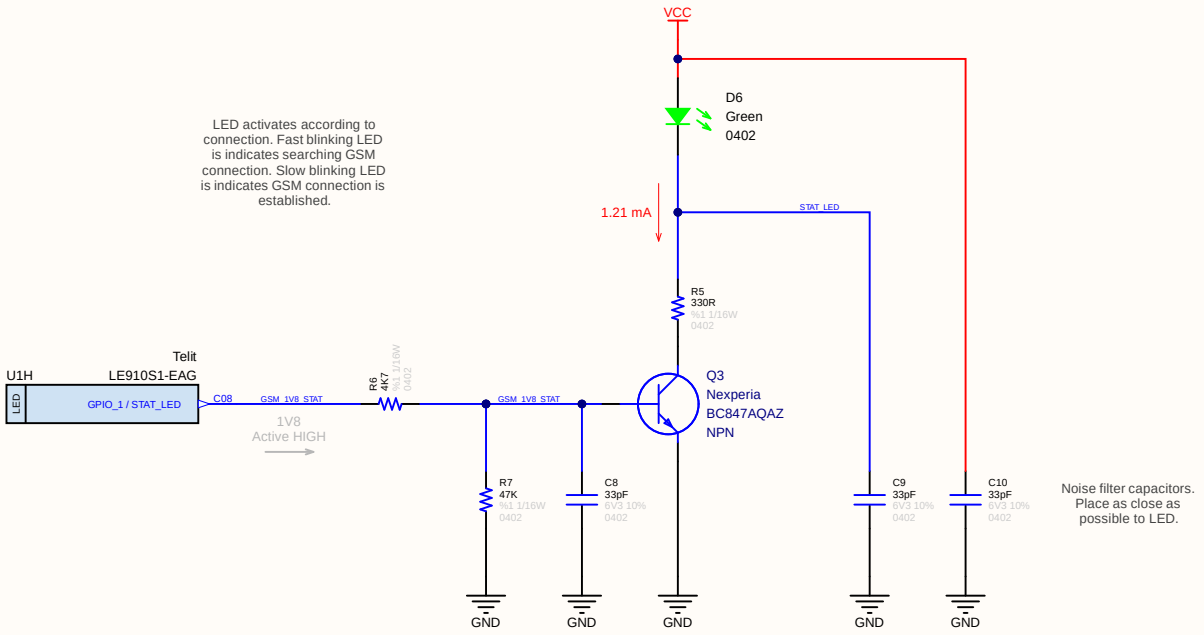

www.github.com/akkoyun/B152AA

Modem LED Driver		Engineer : Gunce Akkoyun	**STF Res-Dev**
		Customer : STF Irrigation	Buyuk Kayacik Mah. 4. OSB
Size : A4	Project : --	Product ID : --	103. Cad. No : 12
		Module ID : B101AA	Selcuklu / Konya Türkiye
Date : 4.10.2022	Time : 10:53:42	Page : 10 / 15	Version : R1
File : GSM Stat LED Driver.SchDoc		Revision : 00.00.01	

Copyright 2022 STF Tarim (Commercial Secret)

© 2021 All rights reserved.
This document may not, in whole or in part, be copied, photocopied, reproduced, translated or converted to any electronic or machine readable from without prior written permission of Mehmet Günce Akkoyun.
Engineer contact : akkoyun@me.com

Property of STF Irrigation

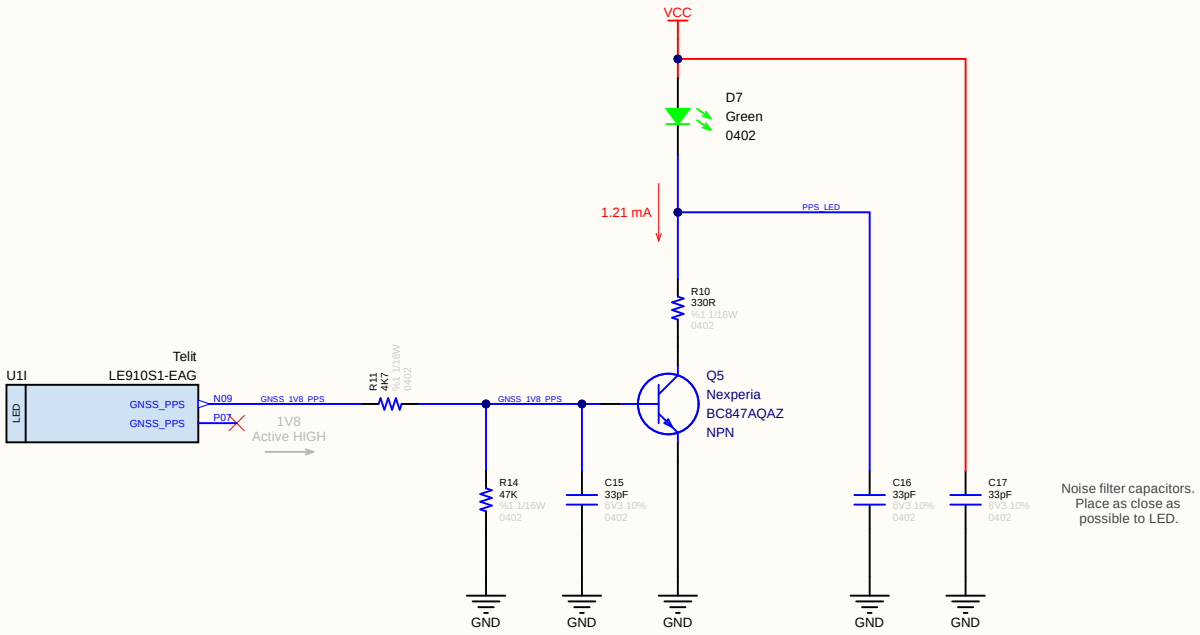

www.github.com/akkoyun/B152AA

GNSS PPS LED Driver		Engineer : Gunce Akkoyun	**STF Res-Dev**
		Customer : STF Irrigation	Buyuk Kayacik Mah. 4. OSB
Size : A4	Project : --	Product ID : --	103. Cad. No : 12
		Module ID : B101AA	Selcuklu / Konya Türkiye
Date : 4.10.2022	Time : 10:53:42	Page : 11 / 15	Version : R1
File : GNSS PPS LED Driver.SchDoc		Revision : 00.00.01	

Copyright 2022 STF Tarim (Commercial Secret)

© 2021 All rights reserved.
This document may not, in whole or in part, be copied, photocopied, reproduced, translated or converted to any electronic or machine readable from without prior written permission of Mehmet Günce Akkoyun.
Engineer contact : akkoyun@me.com

Property of STF Irrigation

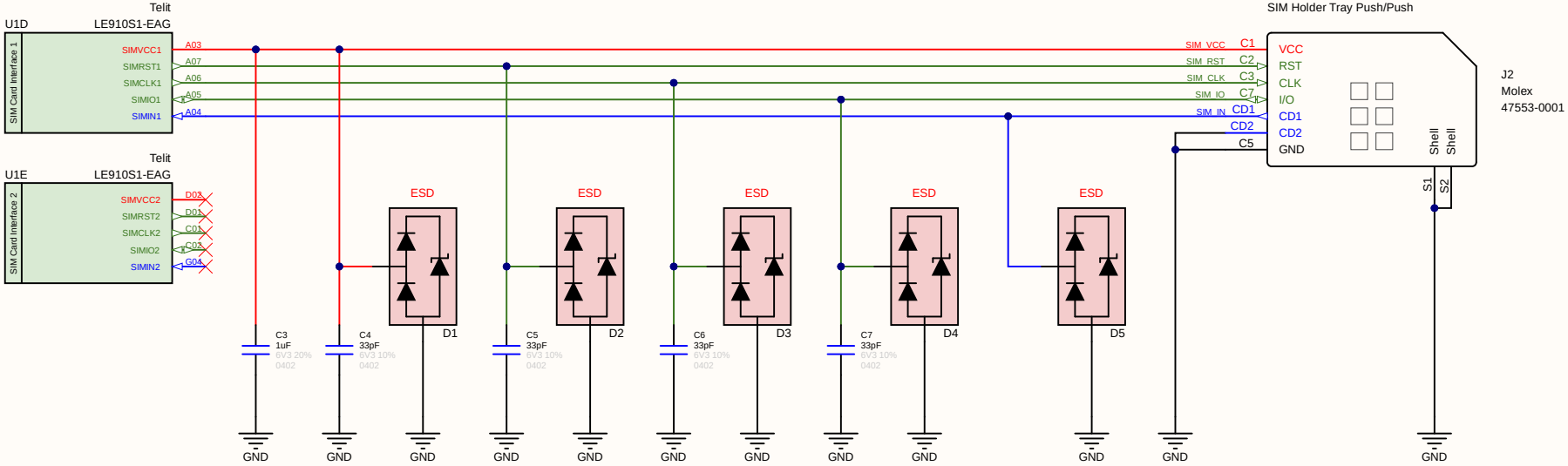

www.github.com/akkoyun/B152AA

SIM Tray		Engineer : Gunce Akkoyun	**STF Res-Dev**
		Customer : STF Irrigation	Buyuk Kayacik Mah. 4. OSB
Size : A4	Project : --	Product ID : --	103. Cad. No : 12
		Module ID : B101AA	Selcuklu / Konya Türkiye
Date : 4.10.2022	Time : 10:53:42	Page : 12 / 15	Version : R1
File : SIM Socket.SchDoc		Revision : 00.00.01	

Copyright 2022 STF Tarim (Commercial Secret)

© 2021 All rights reserved.
This document may not, in whole or in part, be copied, photocopied, reproduced, translated or converted to any electronic or machine readable from without prior written permission of Mehmet Günce Akkoyun.
Engineer contact : akkoyun@me.com

Property of STF Irrigation

Width Constraint [Pref Width = 0.77mm Min Width = 0.77mm Max Width = 0.77mm]
Power Plane Clearance [Clearance = 5.906mil]
Impedance Constraint [Min = 49.00 Max = 50.00]

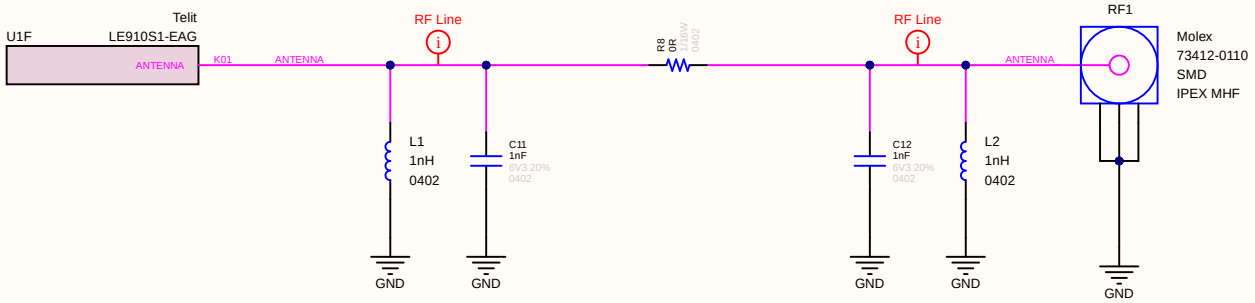

www.github.com/akkoyun/B152AA

GSM Antenna & Match Circuit		Engineer : Gunce Akkoyun	**STF Res-Dev**
		Customer : STF Irrigation	Buyuk Kayacik Mah. 4. OSB
Size : A4	Project : --	Product ID : --	103. Cad. No : 12
		Module ID : B101AA	Selcuklu / Konya Türkiye
Date : 4.10.2022	Time : 10:53:42	Page : 13 / 15	Version : R1
File : GSM Antenna.SchDoc		Revision : 00.00.01	

Copyright 2022 STF Tarim (Commercial Secret)

© 2021 All rights reserved.
This document may not, in whole or in part, be copied, photocopied, reproduced, translated or converted to any electronic or machine readable from without prior written permission of Mehmet Günce Akkoyun.
Engineer contact : akkoyun@me.com

Property of STF Irrigation

Width Constraint [Pref Width = 0.77mm Min Width = 0.77mm Max Width = 0.77mm]
Power Plane Clearance [Clearance = 5.906mil]
Impedance Constraint [Min = 49.00 Max = 50.00]

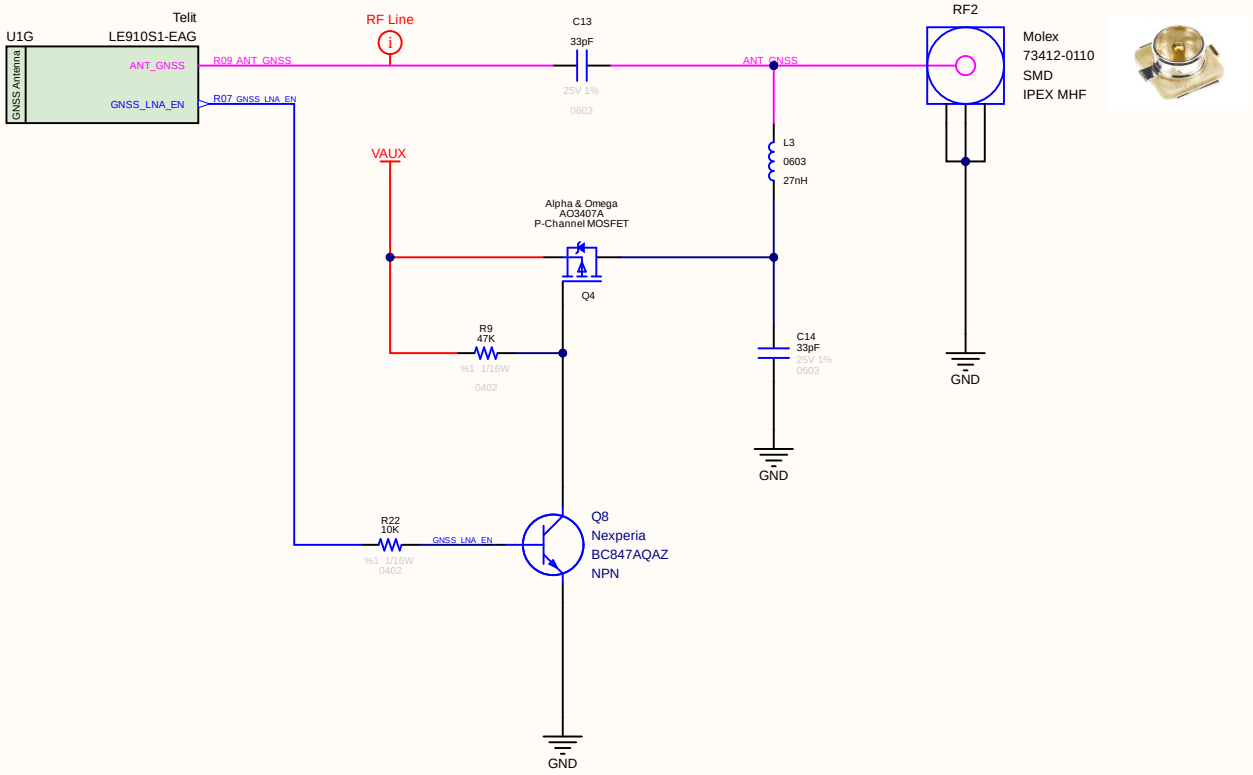

www.github.com/akkoyun/B152AA

GNSS Antenna & LNA		Engineer : Gunce Akkoyun	STF Res-Dev
		Customer : STF Irrigation	Buyuk Kayacik Mah. 4. OSB
Size : A4	Project : --	Product ID : --	103. Cad. No : 12
		Module ID : B101AA	Selcuklu / Konya Türkiye
Date : 4.10.2022	Time : 10:53:42	Page : 14 / 15	Version : R1
File : GNSS Antenna.SchDoc		Revision : 00.00.01	

Copyright 2022 STF Tarim (Commercial Secret)

© 2021 All rights reserved.
This document may not, in whole or in part, be copied, photocopied, reproduced, translated or converted to any electronic or machine readable from without prior written permission of Mehmet Günce Akkoyun.
Engineer contact : akkoyun@me.com

Property of STF Irrigation

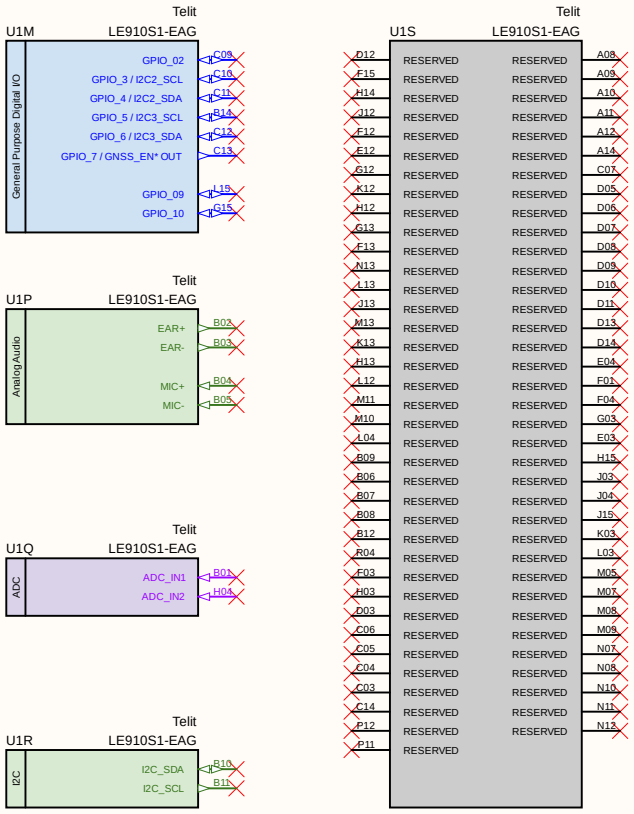

www.github.com/akkoyun/B152AA

LE910 Un Used Pins		Engineer : Gunce Akkoyun	**STF Res-Dev**
		Customer : STF Irrigation	Buyuk Kayacik Mah. 4. OSB
Size : A4	Project : --	Product ID : --	103. Cad. No : 12
		Module ID : B101AA	Selcuklu / Konya Türkiye
Date : 4.10.2022	Time : 10:53:42	Page : 15 / 15	Version : R1
File : GSM Un Used.SchDoc		Revision : 00.00.01	

Copyright 2022 STF Tarim (Commercial Secret)